KOIZUMI
＿違う発想がある

KOIZUMI SANGYO (HK) CORPORATION LTD.
Units A-B, 26th Floor, 8 Hart Avenue, Tsimshatsui, Kowloon, Hong Kong
Tel: +852-2714 3773 Fax: +852-2714 0006

# Item no. SD381-1930B9035

# Series Name: Versa R-G (UL Track) (SD381)

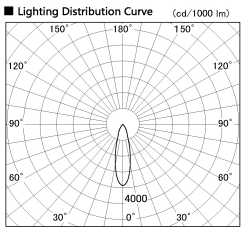


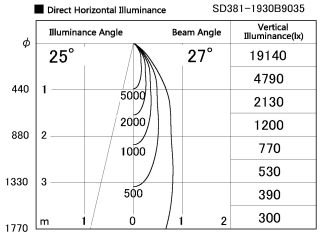

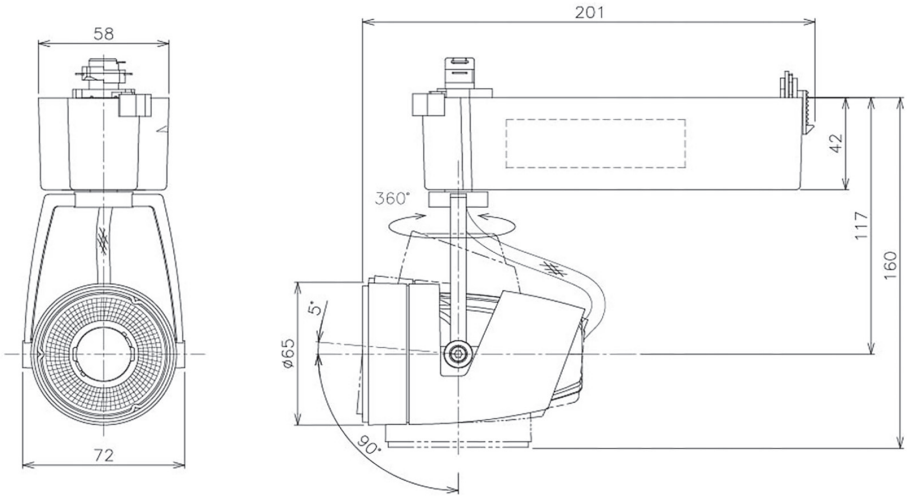
| | |
|---|---|
| Installation | Track Mount |
| Type | Versa R-G (UL Track) (SD381) |
| Fixture wattage | 18.6W |
| Beam angle | 27 deg |
| Color Temp. | 3500K |
| CRI | Ra>90 |
| Luminous | 1541.2172630026 lm |
| Body | Die-castaluminumalloy |
| Body finish | Black |
| Trim finish | Black |
| Reflector finish | N/A |
| IP Rate | IP20 |
| Light source | COBmodule |
| Input Voltage | AC220~240V |
| Dimming Type | Non-Dimmable |
| Certificate | CE,CCC |
| Cut Hole | N/A |